Sensor principle		MH-C2
Electrical data		
Measuring range	°	0 ... 360
Indep. linearity (typ.)	% of meas. range	±0.3
Max. hysteresis	°	0.1
Resolution	bit	16
Max. repeatability	°	0.1
Sample rate	kHz	0.5
Max. temperature coefficient of the output signal	ppm/K	25
MTTFd / MTBF	years	135 / 135
Power supply voltage	VDC	8 ... 35
Current consumption without bus load (typ.)	mA	30
Reverse polarity protection of power supply		yes
Electrical connection		Round cable
Cross section of single wires	mm^2	0.34 (AWG 22)
Bus interface		ISO/DIS 11898-2
CANopen communication according to CiA		Standard DS-301 Rev. 4.02
Device profile		DS-406, Rev. 3.1, Encoder class C2
Default Node-ID		16 (programmable 1 ... 127)
Default bitrate	kBit/s	125
Mechanical data		
Mechanical range	°	360 (continuous)
Protection class		IP68
Min. life	movements	no limitation
Operating & storage temperature	°C	-40 ... +85
EN 60068-2-6 Vibration (Amax = 0.75mm, f = 5…2000Hz)	g	20
EN 60068-2-27 Shock	g	50
Standards		
EN 55022 class B, Emission radiated (30...230MHz)	dB(µV/m)	max. 30
EN 55022 class B, Emission radiated (230...1000MHz)	dB(µV/m)	max. 37
EN 55022 class B, Emission conducted (0.15...0.5MHz)	dB(µV)	max. 56 ... 46
EN 55022 class B, Emission conducted (0.5...5MHz)	dB(µV)	max. 46
EN 55022 class B, Emission conducted (5...30MHz)	dB(µV)	max. 50
EN 61000-4-2, ESD (contact discharge / air discharge)	kV	±4 / ±8
EN 61000-4-3, Immission HF radiated (80...1000MHz/1.4...2.7GHz)	V/m	100
EN 61000-4-4, Burst (on all lines)	kV	±3
EN 61000-4-5, Surge (lines to ground)	kV	±1
EN 61000-4-6, Immission HF conducted (0.15...80MHz)	Vemk	12
EN 61000-4-8, Immission magnetic field (50Hz)	A/m	300
EN 60393-1 Insulation resistance (500VDC, 1bar, 2s)	GOhm	20
EN 60393-1 Dielectric strength (VAC, 50Hz, 1min, 1bar)	kV	1
CANopen conformance certified by CiA	Certificate-#: CiA201003-301V402/20-0116	

Vert-X 32E - 24V / CANopen, single

Applications

- Forklifter
- Platformer
- Agricultural machine

Features

- CiA approved CANopen certified CiA201003-301V402/20-0116
- Non-contacting measuring method
- Very long life
- High accuracy of measurement
- Applications under adverse ambient conditions possible (humidity, dampness, oil dust, vibrations etc.)
- Detection of magnetic loss (with safety flag)
- Full redundancy possible (see separate data sheet)

Errors and omissions excepted. Subject to change without notice. / State: 04.10.16

Contelec AG
Portstrasse 38
CH-2503 Biel/Bienne
Phone +41 (0)32 3665600
Telefax +41 (0)32 3665604
sales@contelec.ch

CONTELEC
A company of the Siedle-Group

Vert-X 32E - 24V / CANopen, single

Ordering code

CAN characteristics

CAN-High-In ; CAN-High-Out ; CAN-Low-In ; CAN-Low-Out	Optional	3
CAN-High ; CAN-Low ; RCAN	Optional	4
CAN-High ; CAN-Low	Standard	5
Special version	Optional	9

Output signal

CANopen Encoder Profile 406 (C2)	Standard	3

Power supply voltage

24VDC	Standard	1

Electrical connection

6	Optional	Round cable 6pole
8	Standard	Round cable 4pole
9	Optional	Special cable

Length of cable

02	Standard	1.0m
06	Optional	3.0m
10	Optional	5.0m
99	Optional	Special length

Vert-X 3 2 E 6 b 8 3 6 1 3 5 8 0 2

Electrical angle

36	Standard	Electrical angle 360°

Sensor principle

8	MH-C2

Mounting hole

b	Standard	Through-hole ø 4.4mm with counterbore ø 8mm / label side
d	Optional	Through-hole ø 4.4mm with counterbore ø 8mm / magnetic actuator side

Mechanical version

32E5	Optional	Magnetic actuator type 5
32E6	Standard	Magnetic actuator type 6
32E7	Optional	Magnetic actuator type 7
32E8	Optional	Magnetic actuator type 8
32E9	Optional	Special magnetic actuator

Options (on request)

	MH-C2
Custom magnetic actuator	X
Custom modification of the housing	X
Custom cable	X
CAN integrated bus termination resistor (120Ω) / RCAN	X
Custom bitrate (10 ; 20 ; 50 ; 100 ; 250 ; 500 ; 800 ; 1000 kBit/s)	X
Full redundancy possible (see separate data sheet)	X
Extended operating range, axial (without safety flag)	X

Errors and omissions excepted. Subject to change without notice. / State: 04.10.16

Contelec AG
Portstrasse 38
CH-2503 Biel/Bienne
Phone +41 (0)32 3665600
Telefax +41 (0)32 3665604
sales@contelec.ch

CONTELEC
A company of the Siedle-Group

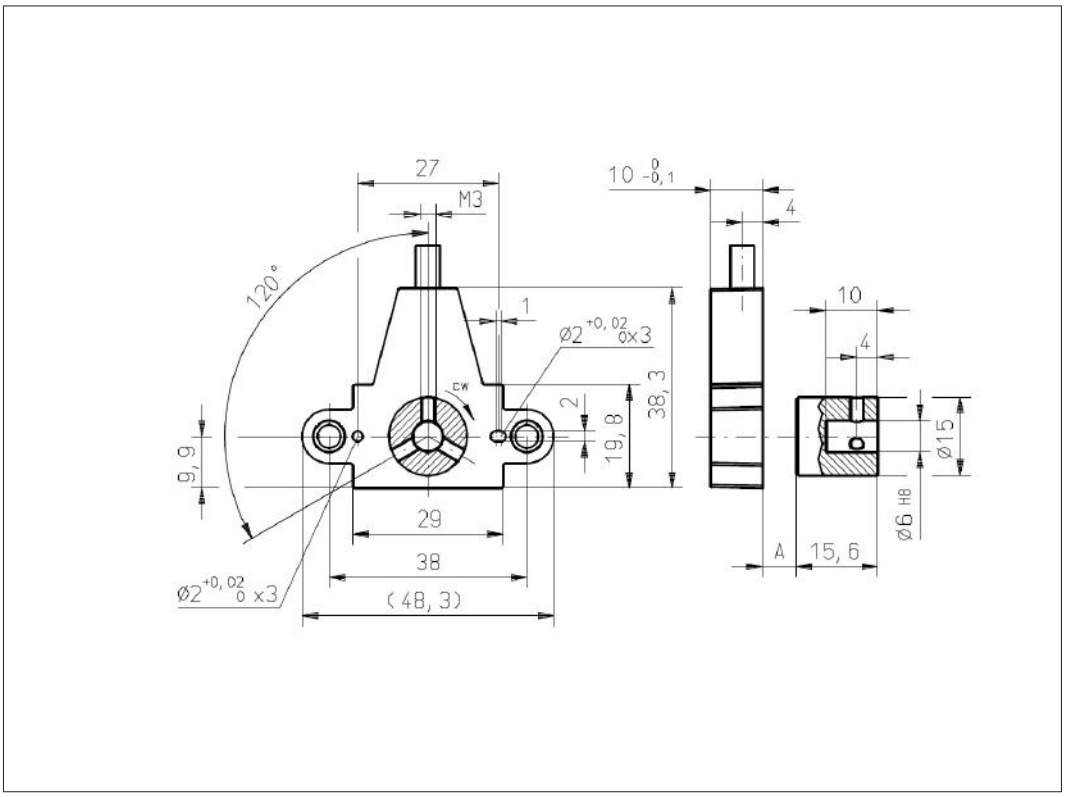

Vert-X 32E5

Accessories (incl.)
None

Operating range/Air gap (A)
Standard with safety flag
Single 0 ... 6.7mm

Extended without safety flag (Optional)
Single 0 ... 10.4mm

Features Safety Flag
- Detection of magnetic loss
- System shut-down in case of magnetic actuator out of valid operating range
- Recommended for safety relevant applications

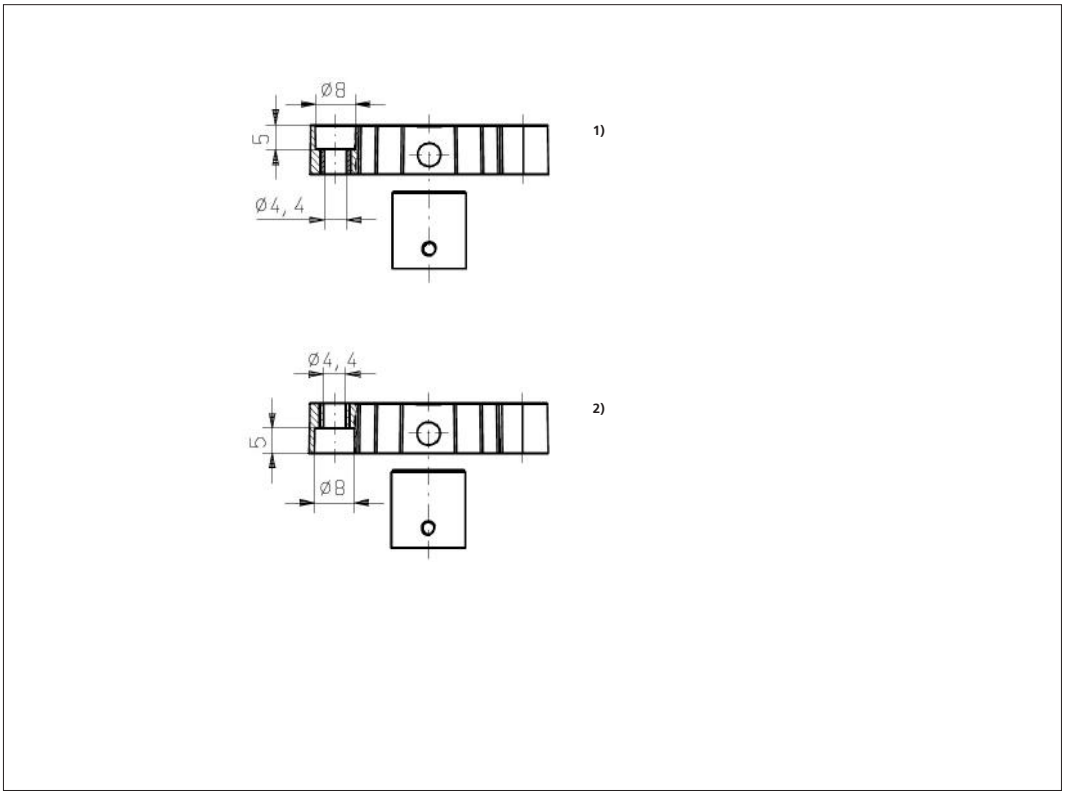

Vert-X 32E5b836 13x xxx 1)

Vert-X 32E5d836 13x xxx 2)

Errors and omissions excepted. Subject to change without notice. / State: 04.10.16

Contelec AG
Portstrasse 38
CH-2503 Biel/Bienne
Phone +41 (0)32 3665600
Telefax +41 (0)32 3665604
sales@contelec.ch

CONTELEC
A company of the Siedle-Group

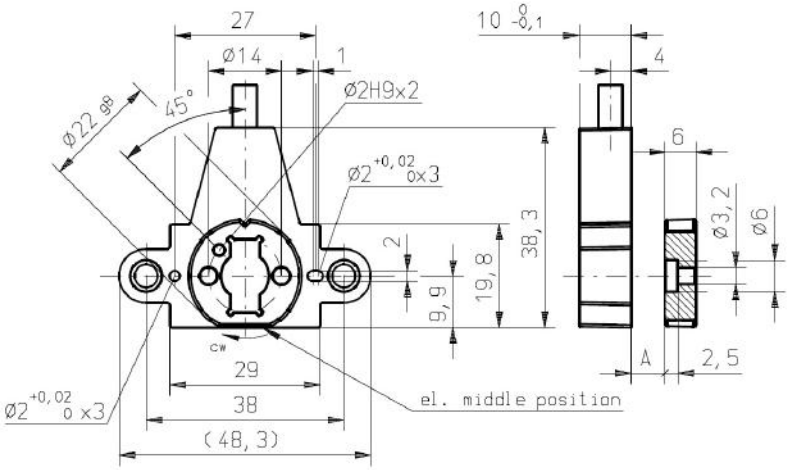

Vert-X 32E6

Accessories (incl.)
None

Operating range/Air gap (A)
Standard with safety flag
Single 0 ... 5.5mm

Extended without safety flag (Optional)
Single 0 ... 8.9mm

Features Safety Flag
- Detection of magnetic loss
- System shut-down in case of magnetic actuator out of valid operating range
- Recommended for safety relevant applications

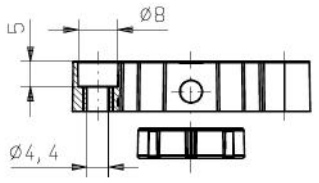

1)

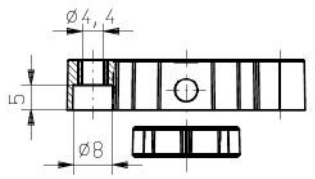

2)

Vert-X 32E6b836 13x xxx 1)

Vert-X 32E6d836 13x xxx 2)

Errors and omissions excepted. Subject to change without notice. / State: 04.10.16

Contelec AG
Portstrasse 38
CH-2503 Biel/Bienne
Phone +41 (0)32 3665600
Telefax +41 (0)32 3665604
sales@contelec.ch

CONTELEC
A company of the Siedle-Group

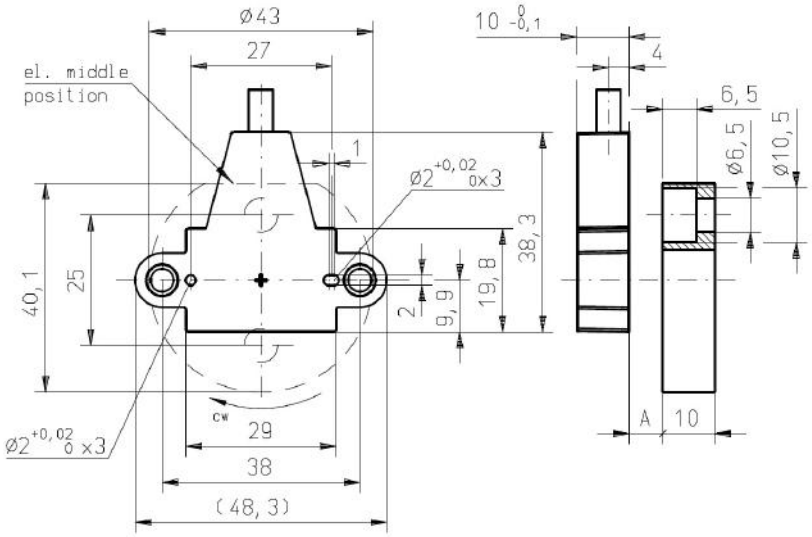

Vert-X 32E7

Accessories (incl.)
None

Operating range/Air gap (A)
Standard with safety flag
Single 0 ... 13.7mm

Extended without safety flag (Optional)
Single 0 ... 20.1mm

Features Safety Flag
- Detection of magnetic loss
- System shut-down in case of magnetic actuator out of valid operating range
- Recommended for safety relevant applications

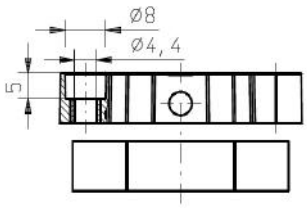

1)

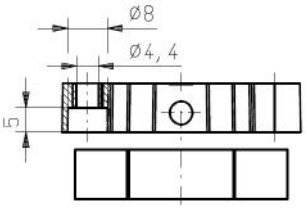

2)

Vert-X 32E7b836 13x xxx 1)

Vert-X 32E7d836 13x xxx 2)

Errors and omissions excepted. Subject to change without notice. / State: 04.10.16

Contelec AG
Portstrasse 38
CH-2503 Biel/Bienne
Phone +41 (0)32 3665600
Telefax +41 (0)32 3665604
sales@contelec.ch

CONTELEC
A company of the Siedle-Group

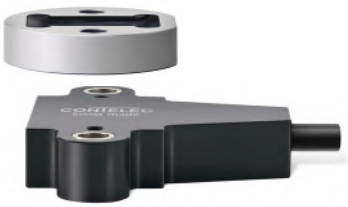

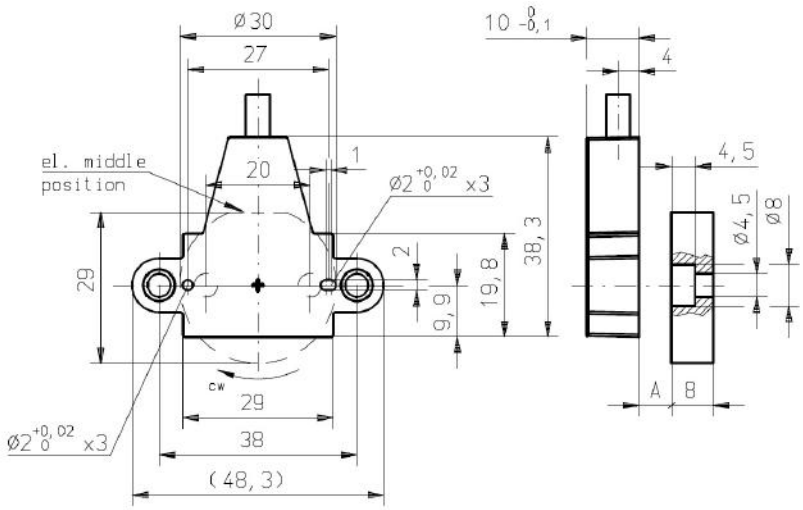

Vert-X 32E8

Accessories (incl.)
None

Operating range/Air gap (A)
Standard with safety flag
Single 0 ... 13.2mm

Extended without safety flag (Optional)
Single 0 ... 19.1mm

Features Safety Flag
- Detection of magnetic loss
- System shut-down in case of magnetic actuator out of valid operating range
- Recommended for safety relevant applications

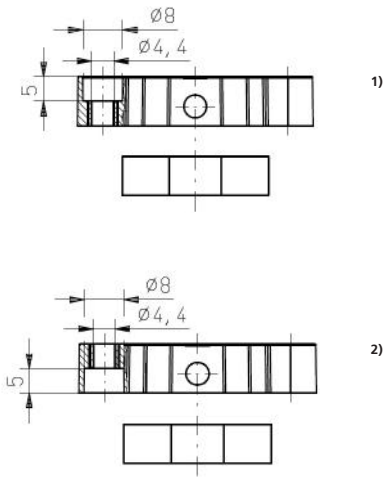

Vert-X 32E8b836 13x xxx 1)

Vert-X 32E8d836 13x xxx 2)

Errors and omissions excepted. Subject to change without notice. / State: 04.10.16

Contelec AG
Portstrasse 38
CH-2503 Biel/Bienne
Phone +41 (0)32 3665600
Telefax +41 (0)32 3665604
sales@contelec.ch

CONTELEC
A company of the Siedle-Group

Vert-X 32E

Indep. linearity with radial misalignment (@360°)

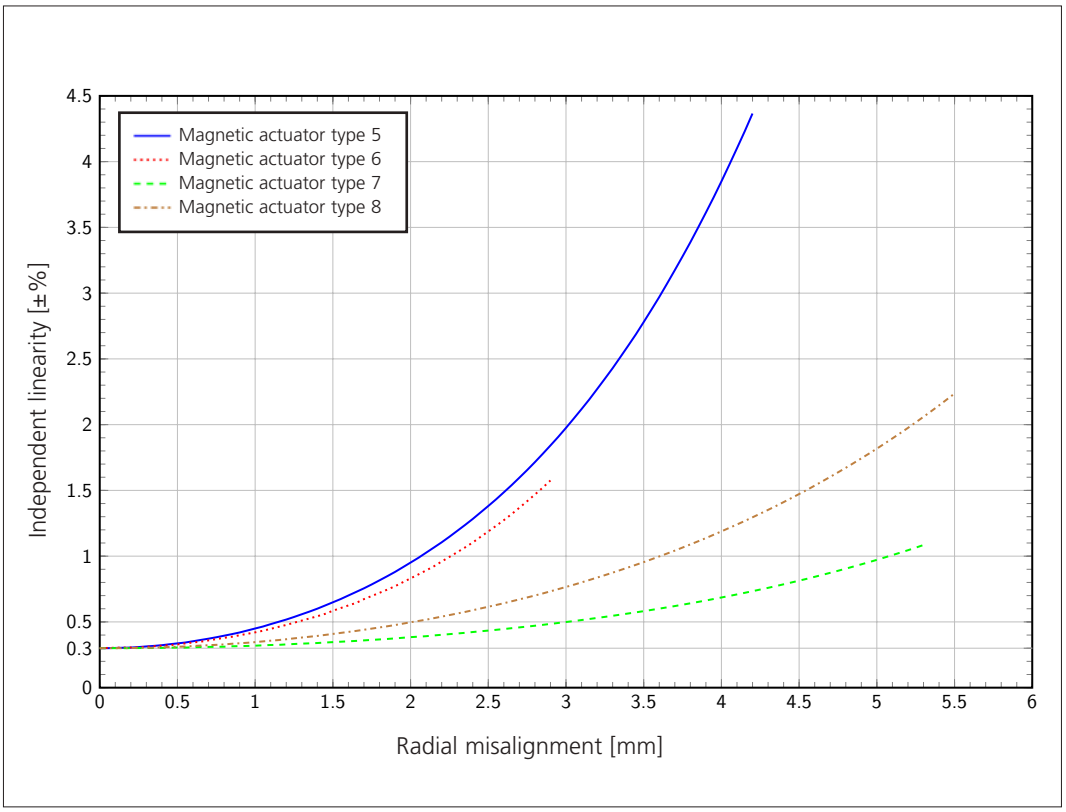

Errors and omissions excepted. Subject to change without notice. / State: 04.10.16

Contelec AG
Portstrasse 38
CH-2503 Biel/Bienne
Phone +41 (0)32 3665600
Telefax +41 (0)32 3665604
sales@contelec.ch

CONTELEC
A company of the Siedle-Group

Vert-X 32E - 24V / CANopen, Certificates

CANopen certified by CiA

Certificate # **CiA201003-301V402/20-0116**

Vendor ID **00 00 00 80**

Manufacturer Contelec AG

Device Vert-X MH-C2 CAN

Product code: 0001 8774h
Object 1018h/02h

Revision number: 0000 00A1h
Object 1018h/03h

Hardware version: HV30781B
Object 1009h

Software version: SV_1.2.3
Object 100Ah

EDS MH-C2_CAN.eds

File version: 1

File revision: 0

EDS version: 4.02

Nuremberg, 26.03.2010

Technical Manager

CAN in Automation GmbH
Kontumazgarten 3
90429 Nuremberg
Germany
phone: +49-911-928819-0
fax: +49-911-928819-79

CANopen certified by CiA

Errors and omissions excepted. Subject to change without notice. / State: 04.10.16

Contelec AG
Portstrasse 38
CH-2503 Biel/Bienne
Phone +41 (0)32 3665600
Telefax +41 (0)32 3665604
sales@contelec.ch

CONTELEC
A company of the Siedle-Group