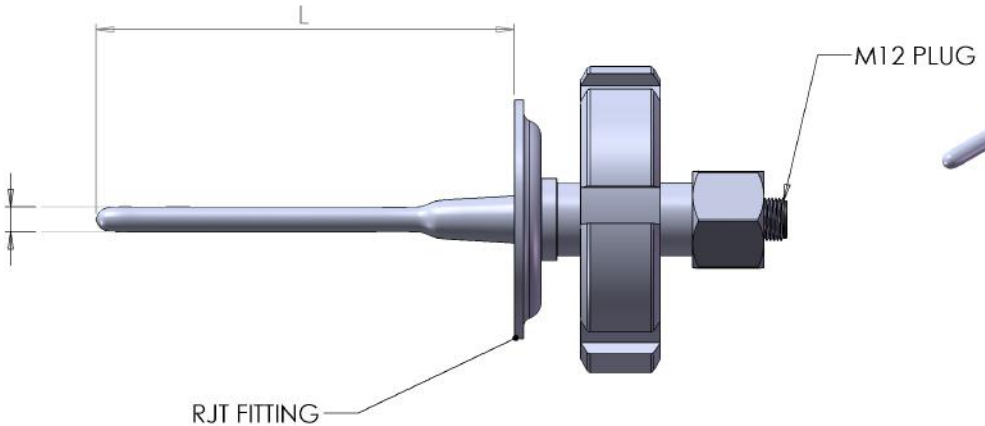

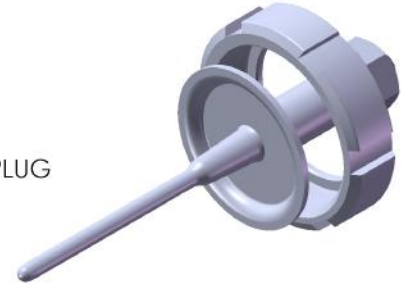

RANGE

Min Temp .....(°C)

Max Temp.....(°C)

Note: All Stainless Steel construction
M12 Plug is plastic insert IP66

SENSOR TYPE

Pt100
Fast Response
Duplex
Other.....

STEM ⊢—L—⊣

6.35mm x .....
Other .....

RJT FITTING

1", 1 1/2", 2", 2 1/2", 3"

Other.....

CONNECTOR

4 Pin (3 wire)
4 Pin (4 wire)
8 Pin (6 wire)*

*required with a duplex sensor

SERVOTECH INSTRUMENTATION LTD
6 WILLIAM PICKERING DRIVE
ALBANY
AUCKLAND, NEW ZEALAND
PHONE: 64-9-415 8362
FAX: 64-9-415 8361
EMAIL: sales@servotech.co.nz
WEBSITE: www.servotech.co.nz

UNLESS OTHERWISE SPECIFIED, ALL DIMENSIONS ARE IN mm

THIS DRAWING IS EXCLUSIVE PROPERTY OF SERVOTECH INSTRUMENTATION LTD AND SHOULD NOT BE COPIED OR HANDED TO OTHER PARTIES WITHOUT PRIOR PERMISSION.

SERVOTECH
Temperature management by design

TITLE: RJT STYLE RTD SANITARY PROBE

DRAWN BY: DAC | DATE: 19/02/2015

GENERIC NO. R28R | A4

SCALE: NTS | MATERIAL: