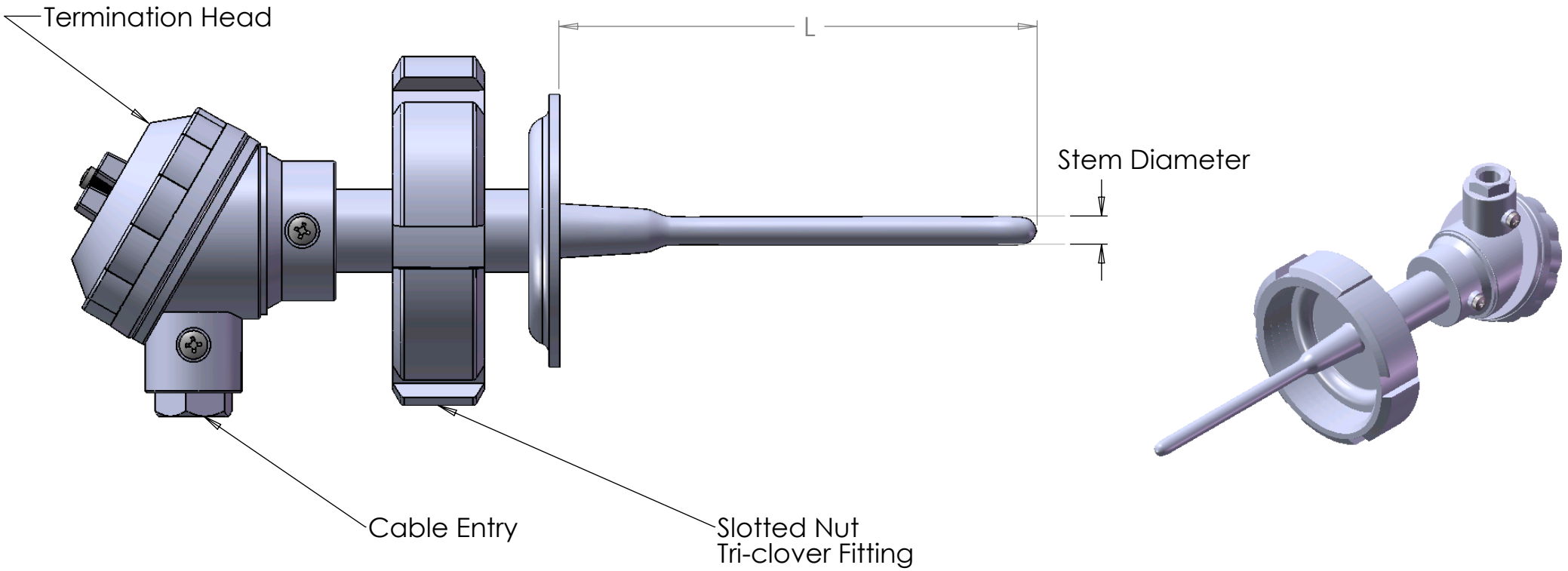

RANGE
Min Temp .....(°C)
Max Temp.....(°C)

SENSOR TYPE	STEM L	HEAD MATERIAL
Pt100 Standard Response Duplex Other.....	6.35mm x ..... Other	Stainless Steel Bakelight Nylon Polypropylene
RJT FITTING	**HEAD**	**CONNECTOR**
1", 1 1/2", 2", 2 1/2", 3" Other.....	Large Small Other.....	3 Terminal 6 Terminal * None Other..... * required with a duplex sensor

SERVOTECH INSTRUMENTATION LTD
6 WILLIAM PICKERING DRIVE
ALBANY
AUCKLAND, NEW ZEALAND
PHONE: 64-9-415 8362
FAX: 64-9-415 8361
EMAIL: sales@servotech.co.nz
WEBSITE: www.servotech.co.nz

UNLESS OTHERWISE SPECIFIED, ALL DIMENSIONS ARE IN mm

THIS DRAWING IS EXCLUSIVE PROPERTY OF SERVOTECH INSTRUMENTATION LTD AND SHOULD NOT BE COPIED OR HANDED TO OTHER PARTIES WITHOUT PRIOR PERMISSION.

SERVOTECH
Temperature management by design

ISO 9001 BUREAU VERITAS Certification

TITLE:
RJT STYLE
RTD SANITARY PROBE

DRAWN BY: AC APPROVED BY: KV | DATE: 7/3/13

GENERIC NO. R27R | A4

SCALE: NTS | MATERIAL: